keonn Retail RFID Systems

AdvanPay-120 ™

RFID UHF reader with confined reading area

Keonn Technologies S.L.

Tel: +34 931 814 477
info@keonn.com

Barcelona
London
Los Angeles

AdvanPay-120 ™

RFID reader for points of sale

Video

Benefits:

- Highly controlled reading area
- Automatic integration with most software applications, through hardware keyboard emulation
- Easy installation and monitoring
- For retailers:
  - Queues reduction, thanks to a much faster payment process
  - Improved customer shopping experience, derived from a shorter payment time
  - Reduction in employee costs
  - Simultaneous item detection and EAS flag activation/deactivation

Applications:

- Points of sale
- Registering at events
- Document and product tracking
- RFID programming
- Verification of tagged items

Product overview

AdvanPay-120 is a high power RFID UHF reader that integrates:

- An antenna with a highly confined reading area
- Keyboard emulation by hardware. It's not needed to install any software at the POS.
- On-board loudspeaker
- Functionalities specifically designed to address the needs of staff at retail stores

AdvanPay-120 has **3 operation modes**, that can be easily selected at any time:

- Payment mode (green light)
- Return mode (red light)
- Read-only mode (blue light)

AdvanPay-120 comes in **three models**:

1. Flush mount (installed recessed in a surface)

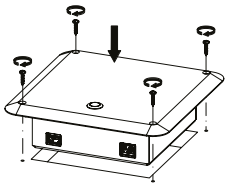

2. Under table mount (installed underneath the surface)

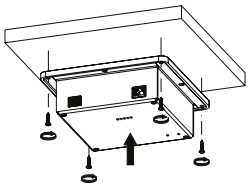

3. Desktop mount (installed on a surface)

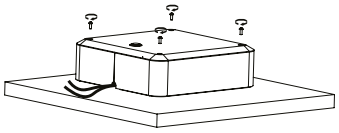

AdvanPay-120 ™

RFID reader for points of sale

Main characteristics

AdvanPay-120 has a **highly confined reading area**, even with far field RFID tags. It only reads the tags that are placed slightly above its surface, which avoids reading unwanted RFID tags.

AdvanPay-120 includes **hardware keyboard emulator** (USB Type-B connector) that allows a very easy and fast integration with point of sales applications, without having to modify such software applications.

The keyboard emulator is easily configured to send the keyboard codes required by each software application.

AdvanPay-120 is **stand alone**. It just needs to be powered with the supplied PoE injector and connected to a computer through the supplied **USB** cable.

AdvanPay-120 can be optionally connected to an Ethernet network switch. This gives AdvanPay the advantages of an **Ethernet-enabled device**: remote control, centralized management, etc.

AdvanPay-120 also offers the possibility to use a USB micro Type B cable as an Ethernet point to point connectivity.

Thanks to its size and its support piece, AdvanPay-120 is the perfect choice for various applications such as point-of-sales, document tracking and RFID programming stations.

In retail stores, AdvanPay-120 reads the EPC codes of the products being purchased while simultaneously **deactivating the EAS flag** of such products, for loss prevention.

AdvanPay-120 under table mount can also be optionally connected to an **external controller** for changing the operation mode, and for turning AdvanPay on and off.

AdvanPay-120 can be used together with AdvanSafe, AdvanMat or AdvanGate to provide a **complete loss prevention system** fully based on RFID UHF.

AdvanPay is available in white or black colour, depending on customer's needs.

Connection to AdvanCloud

AdvanPay can be optionally connected to AdvanCloud cloud-based software platform.

The EPC codes of read RFID are reported to AdvanCloud. This information can then be analyzed for **business intelligence** purposes:

- Products sold
- Products returned
- Cross-selling
- ...

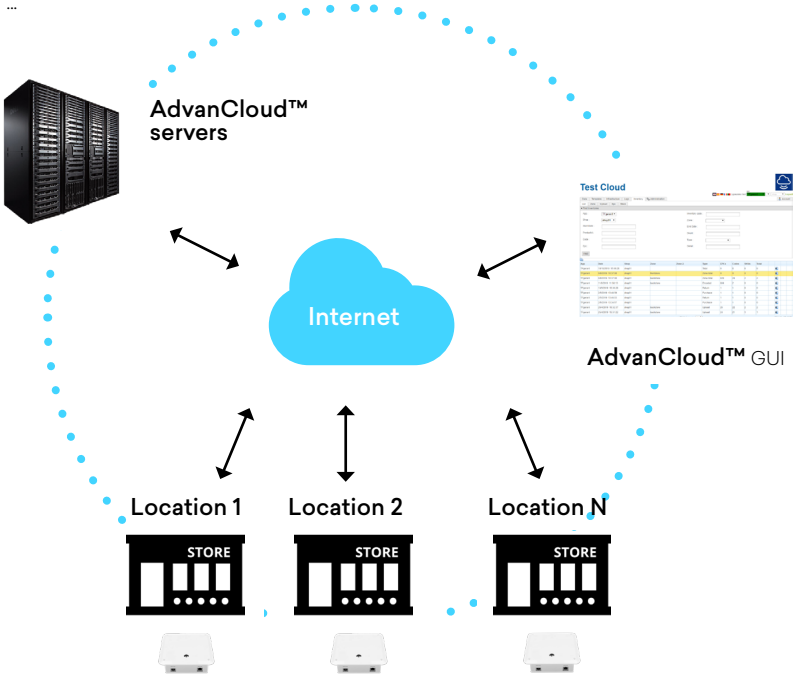

Main functionalities

- Automatically extracts the EAN13 from the EPC
- Includes hardware keyboard emulator that allows to integrate AdvanPay-110 with almost any POS software very quickly, without changing the POS software nor installing additional software in the POS.
- For retail applications, tags can be encoded with EAN13, EAS flag and a serial number
- When write mode is activated, the output power can be automatically increased, and automatically decreased after exiting write mode
- Allows to configure transmitted and write power
- Automatically sends the EPC or EAN13 to the PC

AdvanPay-120 ™

RFID reader for points of sale

Radiofrequency specifications

Air Protocol Interface	EPCglobal UHF Class 1 Gen 2 / ISO 18000-6C
Frequency	FCC (NA, SA) (917.4 – 927.2) MHz ETSI (EU) (865.6 - 867.6) MHz TRAI(India) (865 - 867) MHz KCC (Korea) (917 – 923.5) MHz MIC (Japan) (916.9 – 923.4) MHz ACMA (AU) (920 – 926) MHz NZ (New Zealand) (922 - 927) MHz SRRC-MII (P.R.China) (920.125 – 924.875) MHz MY (Malaysia) (919.0 – 923.0) MHz ID (Indonesia) (923.0 – 925.0) MHz PH (Philippines) (918.0 – 920.0) MHz TW (Taiwan) (922.0 – 928.0) MHz MO (Macao) (920.0 – 925.0) MHz RU (Russia) (866.0 – 868.0) MHz SG (Singapore) (920.0 – 925.0) MHz VN (Vietnam) (866.0 – 869.0) MHz TH (Thailand) (920.0 – 925.0) MHz AR (Argentina) (915.0 – 928.0) MHz HK (Hong Kong) (865.0 – 868.0) MHz BD (Bangladesh) (925.0 – 927.0) MHz Brazil (917.4 – 927.2) MHz by using channel selection Chile(916 – 928) MHz by using channel selection Peru (917.4 – 927.2) MHz by using channel selection Taiwan (922.600 – 927.2) MHz by using channel selection Open Region (859 – 873) MHz and (915 – 930) MHz (by using channel selection)
RF Power	Programmable from 0 dBm to +27 dBm in 0.5 dBm steps
RF Antenna	Integrated circular polarized antenna. RF field is confined to avoid reading unwanted tags.
Data communications	Ethernet: IEEE 802.3 up to 100 Mbps Type B USB HID to emulate barcode reader Console USB (USB micro Type-B connector) Maintenance port Ethernet point-to-point over USB (USB micro Type-B connector)
Power supply	Power Over Ethernet (PoE) • Supports IEEE 802.3af (Type I) and IEEE 802.3at (Type II) • Power consumption: Class 34 • Isolated from Ethernet cable Ratings & Tolerances PSE Type 1: 48 V (- 4 V / +9 V) Maximum power: 15.4 W PSE Type 2: 56 V (- 6 V / +1 V) Maximum power: 30 W On-board battery for RTC chip (CR2032)
On-board actuators	Buzzer 2 Watt loudspeaker
LED indicators	A three-color LED for indicating the active operation mode: • Payment mode (green) • Return mode (red) • Read-only mode (blue)
Compatibility with software applications	Can be easily integrated with any application software, through keyboard wedge
Power consumption	Idle consumption < 2.5 W Default consumption (@10 dBm) < 7 W Max consumption (@27 dBm) < 9 W
Temperature range	Operating temperature -20 °C to +50 °C5 Storage temperature -30 °C to +60 °C
Dimensions (table flush mount)	200 x 200 x 62 mm (7.87 x 7.87 x 2.44 inches)
Dimensions (under table mount)	180 x 180 x 56 mm (7.09 x 7.09 x 2.20 inches)
Dimensions (desktop mount)	200 x 200 x 78 mm (7.87 x 7.87 x 3.07 inches)
Weight (table flush mount)	935 g (0.021 lb)
Weight (under table mount)	820 g (0.018 lb)
Weight (desktop mount)	1330 g (2.932 lb)

Mechanical specifications (table flush mount):

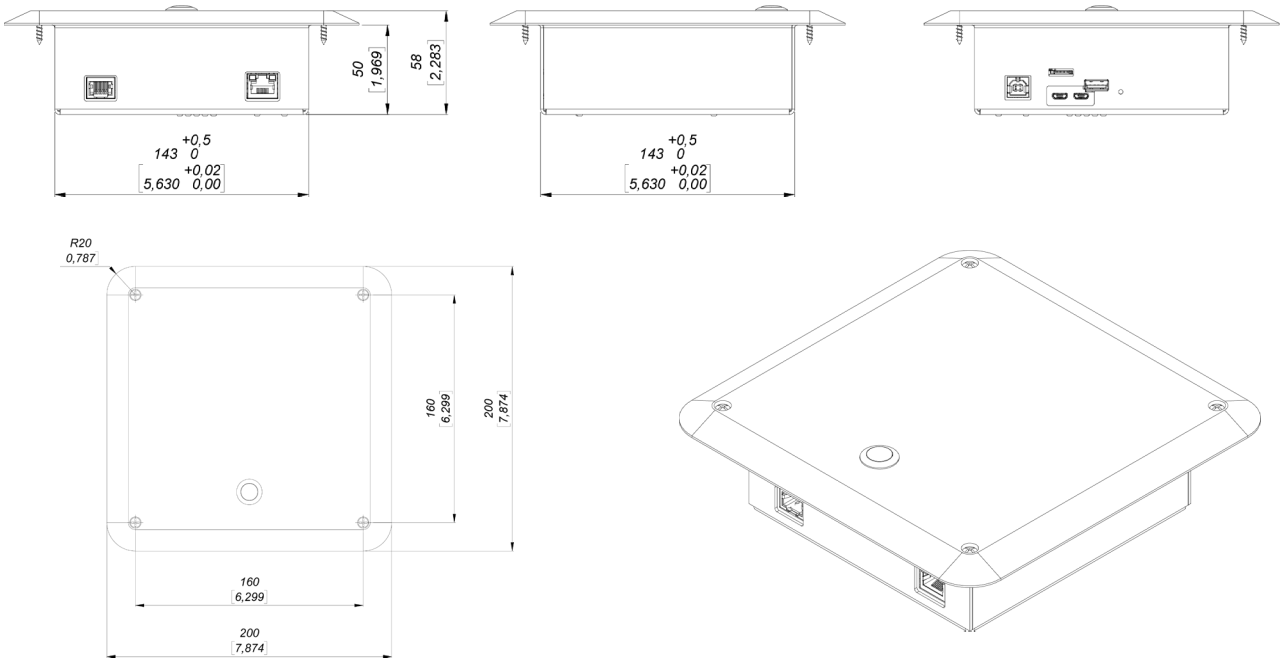

Mechanical specifications (under table mount):

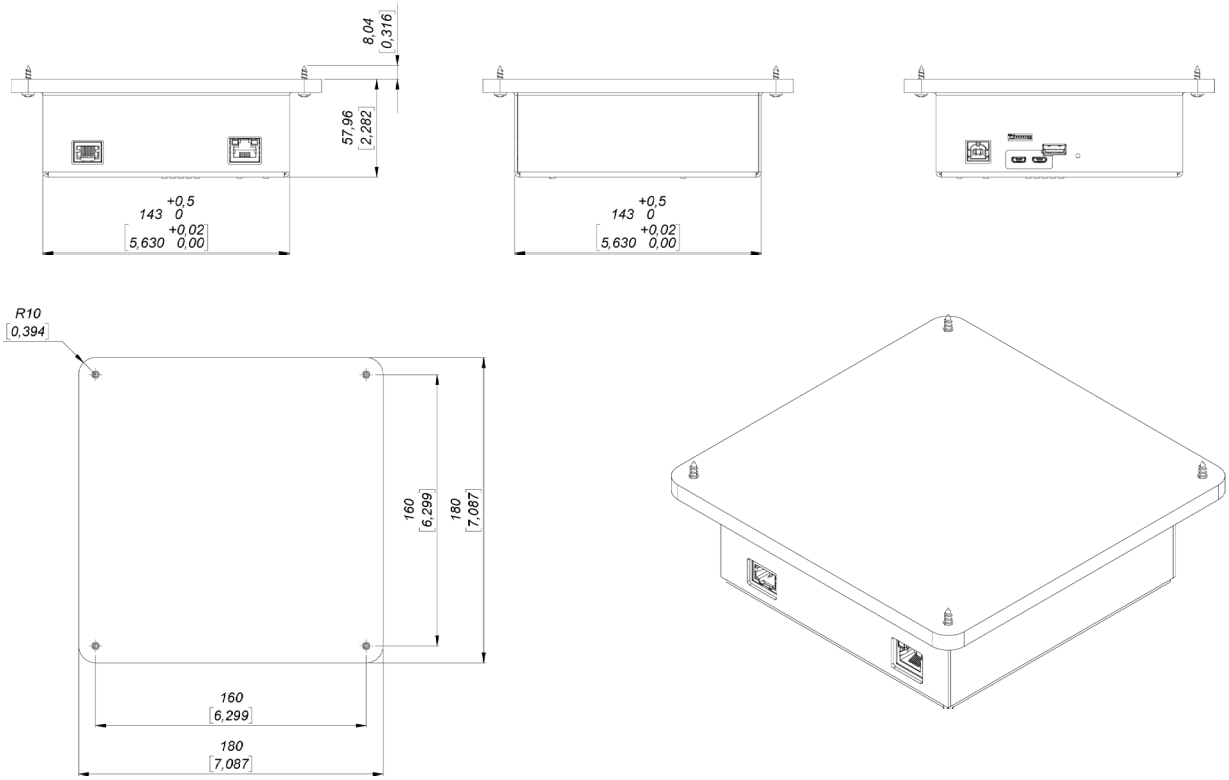

Units in millimeters and [inches]

Mechanical specifications (desktop mount):

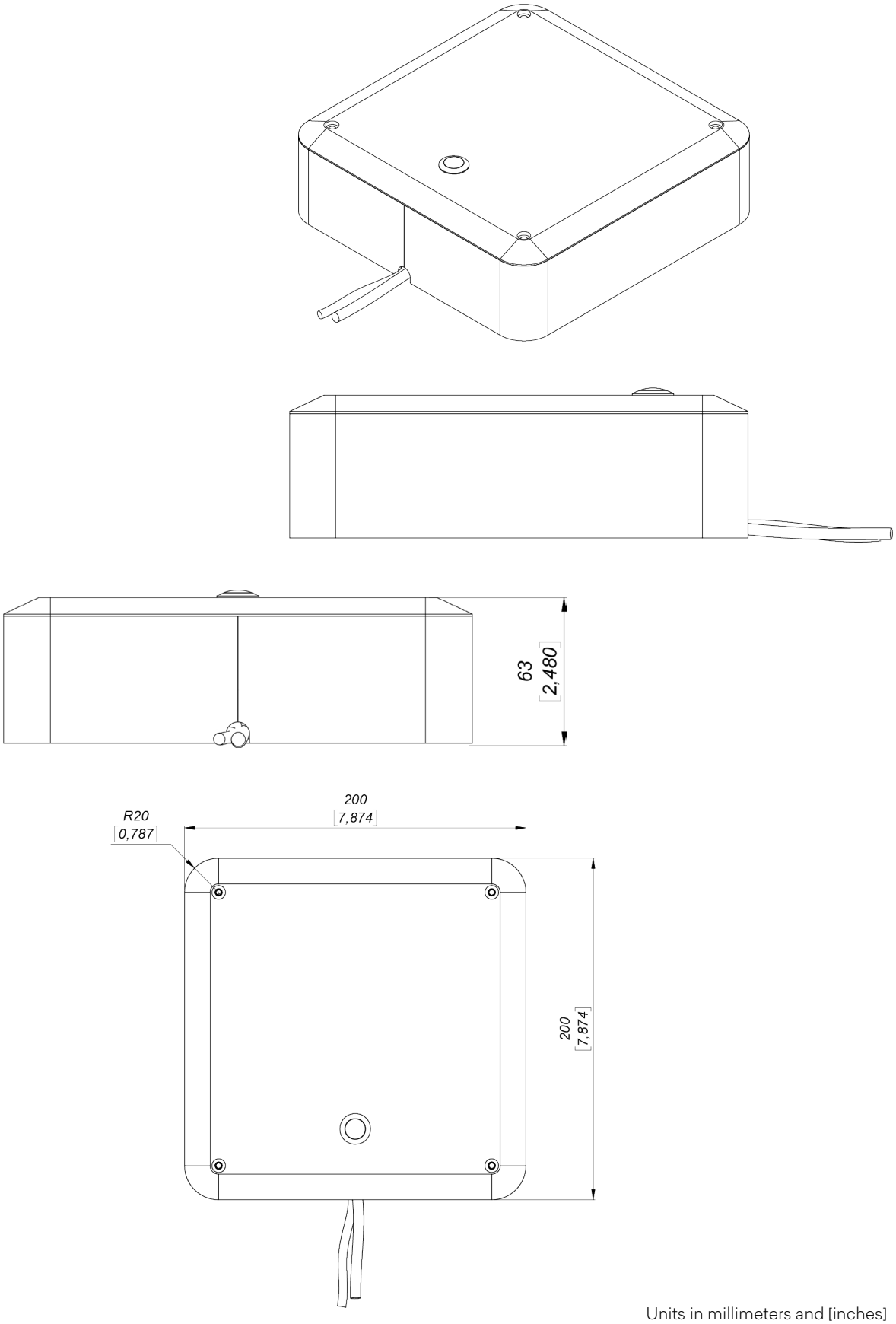

Units in millimeters and [inches]

Product codes for ordering

ADPY	-	C	M	-	FF	-	mmm	
								C = confined
		C						Confined reading area
								M = mount
			U					Under table mount
			F					Table flush mount
			D					Desktop installation
								FF = frequency band
					EU			865,6 MHz - 867,6 MHz
					US			902,0 MHz - 928,0 Mhz
								Model
							120	Model number

Examples:

ADPY-CU-EU-120:

- AdvanPay
- **C**onfined
- **U**nder table mount
- Frequency band: 865,6 MHz - 867,6 MHz
- Model 120

Copyright © Keonn Technologies S.L.
All rights reserved.

Information in this publication supersedes all earlier versions. Specifications subject to change without notice.

Keonn Technologies S.L.

Tel: +34 931 814 477
info@keonn.com

Barcelona
London
Los Angeles